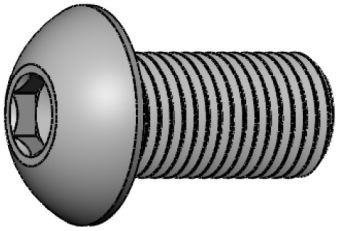

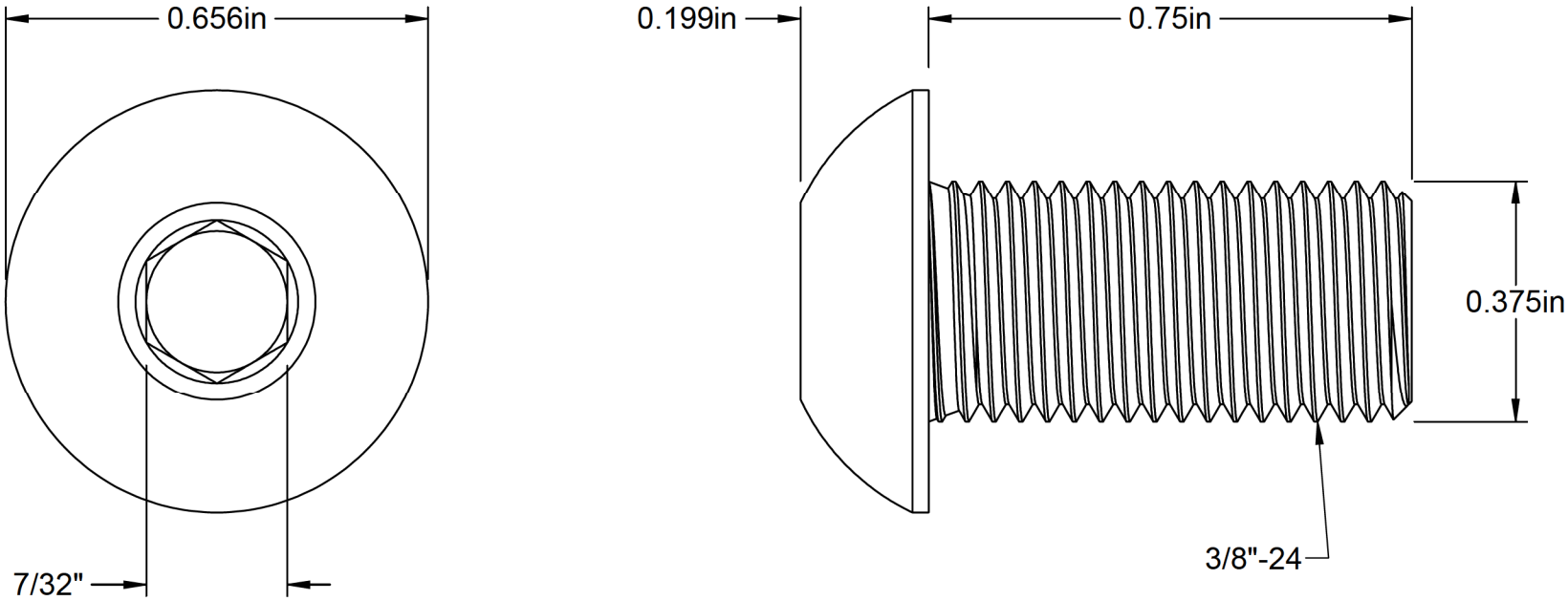

Note:

Surface Finish: Electropolish

PART NUMBER	**VT37E24BH750**
18-8 Stainless Steel Button Head Hex Drive Screw	